ZEMPER

Datasheet
DIANA FLAT

LDF9400LDPW

ELECTROZEMPER S.A.
Avda. de la Ciencia s/n.
Parque Ind. Avanzado
13005 Ciudad Real. Spain.
Tel.: +34 902 11 11 97
Fax: +34 902 11 11 97
info@zemper.com
www.zemper.com

Graphic reference

Dimensions

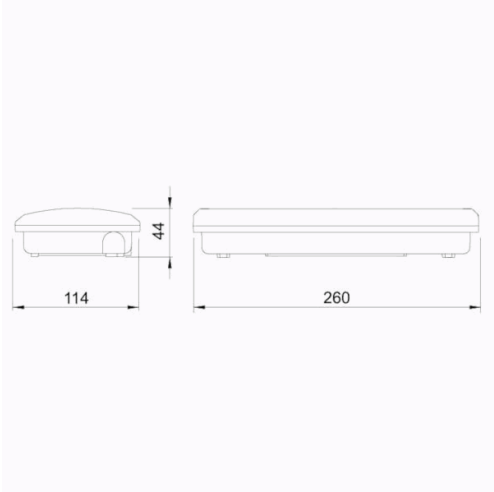

Control System: AutoTest Centralized Wireless

Luminaire: Self-Contained

Standards: EN-60598-1, EN-60598-2-22, EN-62034

Certification: CE, ENEC

Electrical characteristics

Supply: 230V 50Hz<3.8W
Maintained mode consumption: 3.8 W
Non-maintained mode consumption: 0.9 W
Working temperature: 0-40ºC
Emergency lamp: 12 x LED 0.5W
Emergency lumen output: 390 lm
Maintained lumen output: 235 lm
Battery: 3.2V-1.5Ah LFP

Class: II
Mode: M/NM
Power factor: - %
Signaling Luminaire: -
LED temperature: 4000ºK
Duration: 1 h
Remote control: No
Charging time: 12 h

Mechanical characteristics

Envelope: Polycarbonate
Diffuser: Transfresnel Polycarbonate
Suitable for flammable surfaces: Yes

ATEX Envelope:

IP/IK: IP44/IK07
Finish: White RAL9003

Weight: 0,50KG

Photometric curve

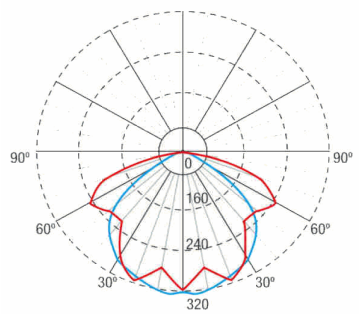

Interdistance

Installation height		
2,0 m	12,02 m	8,33 m
2,5 m	13,39 m	9,43 m
3,0 m	14,36 m	10,38 m
3,5 m	15,19 m	11,35 m

25/10/2023

ELECTROZEMPER S.A.
Avda. de la Ciencia s/n.
Parque Ind. Avanzado
13005 Ciudad Real. Spain.
Tel.: +34 902 11 11 97
Fax: +34 902 11 11 97
info@zemper.com
www.zemper.com

Installation characteristics

Maintained luminaires have a selector bridge to enable / disable the maintained mode.
Installation with mounting plate.
Possibility of installation in:
- Ceiling/Wall surface.
- Reccesed in ceiling.
- Semi-reccesed in wall.

Possibility of connection with:
- Recessed wiring.
- Surface tube wiring (max. M20)

Operating characteristics

The luminaire has status LEDs, which indicates:
- Status of the battery charging circuit.
- Battery status (duration)
- Emergency status function.
- Test status.

Microprocessor controlled luminaire
The luminaire can be connected to a control unit.
When the luminaire is installed without a control unit, it performs periodic and automatic tests.
- Functional test every 7 days.
- Duration test every 365 days.

The test result is shown in the status indicator LEDs.
Wireless communication that allows: Communication with Control unit by wireless communication with a 868Mhz frequency system.

General Envelope data

ZEMPER

Datasheet
DIANA FLAT

LDF9400LDPW

ELECTROZEMPER S.A.
Avda. de la Ciencia s/n.
Parque Ind. Avanzado
13005 Ciudad Real. Spain.
Tel.: +34 902 11 11 97
Fax: +34 902 11 11 97
info@zemper.com
www.zemper.com

Accessories

AMD0051

ACC. REC. DIANA FLAT WHITE CEILING

90091NMF

ACC. PANEL REC. DIANA FLAT WHITE CEILING

APE0065

ACC. HOUSING IP66 DIANA FLAT WHITE

APE144

ACC. HOUSING IP44 DIANA FLAT WHITE

AED0071

ACC. SEMI-REC. DIANA FLAT WHITE WALL

AMU8001

ACC. FRAME REC. DIANA/XENA WHITE UNIVERSAL

AIF001

ACC. SLOPE 47° FLAT WHITE

AKF001

ACC. PROT. IK10 FLAT WHITE

AGV120

ACC. PROTEC. GRILLE FLAT/VENUS

For luminaires in a color other than white, check the availability and reference of accessories in color